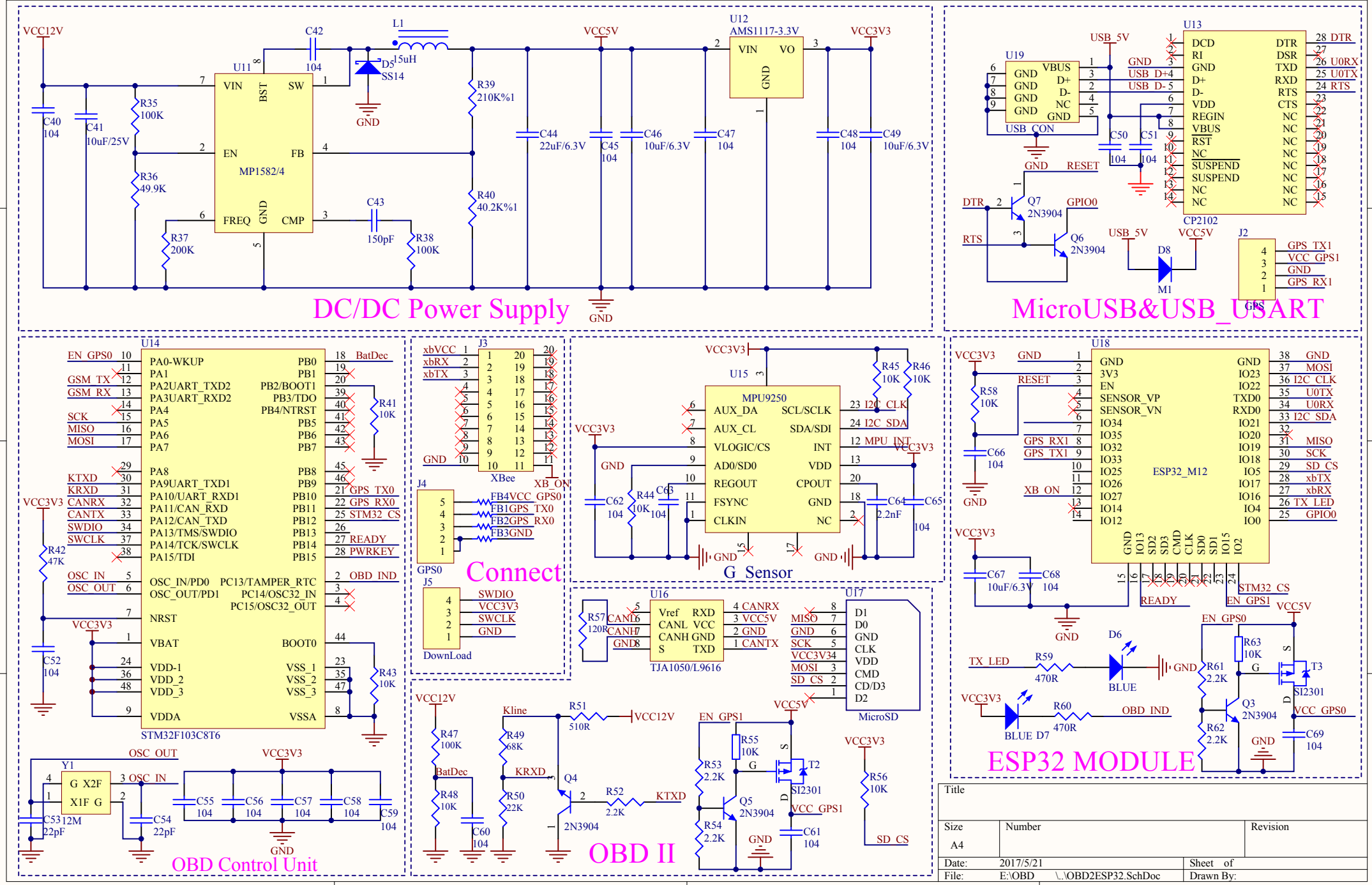

Title		
Size A4	Number	Revision
Date: 2017/5/21		Sheet of
File: E:\OBD \..\OBD2ESP32.SchDoc		Drawn By: